ATTENTION!

For Any Issues with this Product, Contact Customer Service.

We are glad to assist you with any parts or assembly problems you might have!

[AUSTRALIA]

For Any Issues with this Product, Contact Customer Service.

Hunter Products Pty Ltd
Phone: 1800 224 094
Email: enquiries@hunterproducts.com.au
233 Bay Street, Brighton Victoria, 3186, Australia

ALWAYS WEAR YOUR HELMET WHEN RIDING THIS PRODUCT!

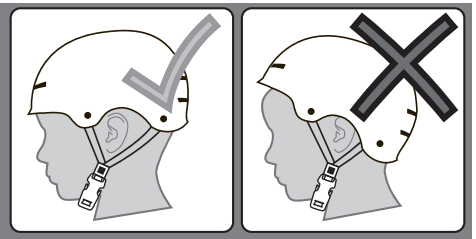

Always read the user manual that comes with your helmet to make sure it is fitted and attached properly to the wearer's head according to the fitting instructions described in the user manual.

For ASSEMBLY Help:

https://www.huffybikes.com/global-contacts/

Please REGISTER your Product:

for current contact information

https://www.huffybikes.com/global-contacts/

H-MTB - IM101_05-22-23 **m1071 AU**

AU

Date Code Label Here

Owner's Manual for Mountain Bikes

This manual contains important safety, assembly, operation and maintenance information.
Please read and fully understand this manual before operation.
Save this manual for future reference.

Always wear approved helmet and safety equipment when using this product.

See back page for Customer Service Information

Index

⚠ IMPORTANT!! BEFORE YOUR FIRST RIDE:

- Read entire manual, including all safety warnings.

See Maintenance section to:
- Check Tire Pressure.

Owner's Bicycle Identification Record

NOTE: This information is only available on the bicycle itself.

Each bicycle has a Recovery Code stamped into the frame. The Recovery Code ① can be found on the bottom of the crank housing as shown.

Write this number below to keep it for future reference. If the bicycle is stolen, give this number and a description of the bicycle to the police. This will help them find the bicycle.

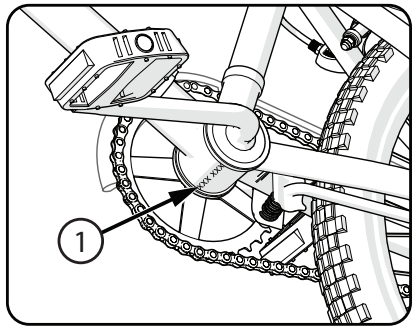

Model Number: .....

Purchase Date: .....

Model Name: .....

Fitting the Rider to the Bicycle

A bike which you ride only on paved surfaces, should give you a minimum stand-over height clearance ① of 2 inches (5 cm). A bike that you'll ride on unpaved surfaces should give you a minimum of 3 inches (7.5 cm) of stand-over height clearance. And a bike that you'll use off road should give you 4 inches (10 cm) or more of clearance.

NOTE: See Assembly sections for Seat adjustment.

Adjust the seat height so that you can put the heel of one foot on a pedal with leg extended straight Ⓐ - and so the opposite foot can reach the ground with tip of foot Ⓑ. This will give your knees a slight bend when pedalling with the ball of the foot.

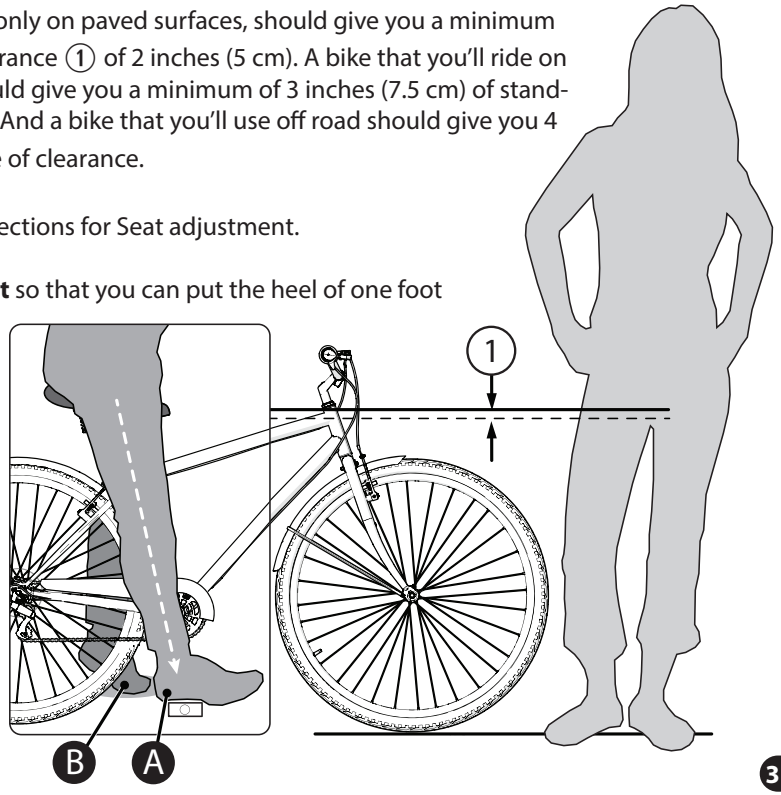

Meanings of Warnings:

This symbol is important. See the word "**CAUTION**" or "**WARNING**" which follows it. The word "**CAUTION**" is before mechanical instructions. If you do not obey these instructions, mechanical damage or failure of a part of the bicycle can occur.
The word "**WARNING**" is before personal safety instructions. If you do not obey these instructions, injury to the rider or to others can occur.

WARNING:

- CHOKING HAZARD. Small parts. Not for children under 3 years.
- Adult assembly is required.
- Handlebar hand grip or tube end plugs should be replaced if damaged as bare tubes have been known to cause injury. All products with capped handlebar ends should be checked regularly to ensure that adequate protection for the ends of the handlebars are in place.
- Replacement forks must have the same rake and tube inner diameter as the original product.
- Do not add a motor to the product.
- Do not tow or push the product.
- Do not tow anything behind the product.
- Do not modify the product.
- Replace worn or broken parts immediately with original equipment.
- If anything does not operate properly, discontinue use.

NOTE on HANDBRAKES:

In Australia/New Zealand/China:
- **Left Brake Lever** controls the **Rear** Brake
- **Right Brake Lever** controls the **Front** Brake

Most other countries:
- **Left Brake Lever** controls the **Front** Brake
- **Right Brake Lever** controls the **Rear** Brake

NOTE: The brake cables for front and rear brakes shall be positioned on the right or left brake lever according to the legislation or custom and practice of the country in which the bicycle is sold.

ALWAYS WEAR YOUR HELMET WHEN RIDING THIS PRODUCT!

Always read the user manual that comes with your helmet to make sure it is fitted and attached properly to the wearer's head according to the fitting instructions described in the user manual.

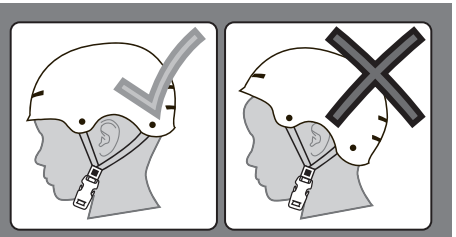

Limited Warranty (Australia)

General:
Part or model specifications are subject to change without notice.

This Limited Warranty is the only warranty for the product. ALL WARRANTIES OTHER THAN STATED HEREIN ARE DISCLAIMED INCLUDING IMPLIED WARRANTIES OF MERCHANTABILITY AND FITNESS FOR A PARTICULAR PURPOSE, TO THE EXTENT ALLOWABLE BY APPLICABLE LAW. ALL LIABILITY FOR INCIDENTAL, PUNITIVE, SPECIAL, OR CONSEQUENTIAL DAMAGES ARE EXPRESSLY DISCLAIMED, TO THE EXTENT ALLOWABLE BY APPLICABLE LAW.

The only uses for this product are described in this manual.
Warranty registration is not required.
The Limited Warranty extends only to the original consumer and is not transferable to anyone else.

What does this Limited Warranty cover?
This Limited Warranty covers defects in workmanship and materials for all parts of the product except those indicated below as not warranted.

What must you do to keep the Limited Warranty in effect?
This Limited Warranty is effective only if:
- Product is completely and correctly assembled.
- Product is used under normal conditions for its intended purpose (see the following section for excluded activities).
- Product receives all necessary maintenance and adjustments.
- Product is used for general transportation and recreational use only.

What is not covered by this Limited Warranty?
This product is designed for recreational use only. This Limited Warranty does not cover normal wear and tear, normal maintenance items, or any damage, failure, or loss that is caused by improper assembly, maintenance, adjustment, storage, or use of the product. This Limited Warranty does not extend to future performance.

This Limited Warranty will be void if the product is ever:
- Used in any competitive sport.
- Used for stunt riding, jumping, aerobatics or similar activity.
- Modified in any way.
- Modified with the addition of a motor.
- Ridden by more than one person at a time.
- Exceeds weight limit.
- Rented, sold, or given away.
- Used in a manner contrary to the instructions and warnings in this Owner's Manual.

What will The Manufacturer do?
Manufacturer's sole and exclusive obligation under this Limited Warranty is to repair and/or replace, at its sole option, any covered defect in workmanship or materials.

How do you report a problem with this product or submit a warranty claim?
- Contact Customer Service in Australia or New Zealand (See included list for Customer Contact information).
- Warranty claims can be submitted to;
  Hunter Products Pty Ltd - PH: **1800 224 094**
  Email: **enquiries@hunterproducts.com.au** -
  233 Bay Street, Brighton Victoria, 3186, Australia.

The following text is incorporated into this Limited Warranty if this product was purchased in Australia (but it is not incorporated if such product was purchased in New Zealand):
- Our goods come with guarantees that cannot be excluded under the Australian Consumer Law. You are entitled to a replacement or refund for a major failure and for compensation for any other reasonably foreseeable loss or damage. You are also entitled to have the goods repaired or replaced if the goods fail to be of acceptable quality and the failure does not amount to a major failure.

What rights do you have?
This Limited Warranty gives you specific legal rights. You may also have other rights which vary from State to State.

For how long does this Limited Warranty last?
- When used in this Limited Warranty, the phrase "for life" means for as long as the original consumer owns the product.
- Steel Frame and Fork: Lifetime
- Aluminum Frame: 10 years
- Shock Fork/Aluminum Fork: 1 year
- Electronics: 90 days
- All other components: 6 months

The Owner's Responsibility

WARNING: This bicycle is made to be ridden by one rider at a time for general transportation and recreational use. It is not made to withstand the abuse of stunting and jumping.

If the bicycle was purchased unassembled, it is the owner's responsibility to follow all assembly and adjustment instructions exactly as written in this manual, and any "Special Instructions" supplied and to make sure all fasteners and components are securely tightened.

NOTE: Periodically check that all fasteners and components are securely tightened.

If the bicycle was purchased assembled, it is the owner's responsibility, before riding the bicycle for the first time, to make sure the bicycle has been assembled and adjusted exactly as written in this manual, and any "Special Instructions" supplied and to make sure all fasteners and components are securely tightened.

Torque Table

Recommended Torque:
Use of a torque wrench is recommended. Recommended torque for each fastener is listed below. In addition to tightening to the recommended torque, please ensure the parts of the product are sufficiently tightened by performing the functional tests (in the component assembly sections of the owner's manual) on each component as it is tightened.

NOTE: Please check that all fasteners on the product are torqued according to the table below:

Recommended Torque for clean, dry threads:		How to Measure:
Fastener Size	**Torque (N•m / ft-lb)**	Screw or bolt size is determined by the width at the THREADS as shown.
M4 mm (.157 in)	2.8 N•m (24.78 in-lb)	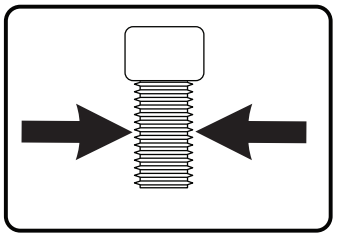
M5 mm (.196 in)	5.5 N•m (48.67 in-lb)	
M6 mm (.236 in)	9.5 N•m (84.08 in-lb)	
M7 mm (.275 in)	16.3 N•m (12 ft-lbs)	
M8 mm (.314 in)	23 N•m (17 ft-lbs)	
M10 mm (.393 in)	44.7 N•m (33 ft-lbs)	

Radio Frequency Information (if applicable)

WARNING: Changes or modifications to this unit not expressly approved by the party responsible for compliance could void the user's authority to operate the equipment.

This device or charger/adapter complies with Part 15 of the FCC Rules. Operation is subject to the following two conditions: **(1)** this device may not cause harmful interference **(2)** this device must accept any interference received, including interference that may cause undesired operation.

NOTE: This equipment has been tested and found to comply with the limits for a Class B digital device, pursuant to Part 15 of the FCC Rules. These limits are designed to provide reasonable protection against harmful interference in a residential installation. This equipment generates, uses and can radiate radio frequency energy and, if not installed and used in accordance with the instructions, may cause harmful interference to radio communications.

However, there is no guarantee that interference will not occur in a particular installation. If this equipment does cause harmful interference to radio or television reception, which can be determined by turning the equipment off and on, the user is encouraged to try to correct the interference by one or more of the following measures: Reorient or relocate the receiving antenna; Increase the separation between the equipment and receiver; Connect the equipment into an outlet on a circuit different from that to which the receiver is connected; Consult the dealer or an experienced radio/TV technician for help.

Inspection of the Bearings

Maintenance

Frequently check the bearings of the bicycle. Have a bicycle service shop lubricate the bearings once a year or any time they do not pass the following tests:

Head Tube Bearings

The fork should turn freely and smoothly at all times. With the front wheel off the ground, you should not be able to move the fork up, down, or side-to-side in the head tube.

Crank Bearings

The crank should turn freely and smoothly at all times and the front sprockets should not be loose on the crank. You should not be able to move the pedal end of the crank from side-to-side.

Wheel Bearings

Lift each end of the bicycle off the ground and slowly spin the raised wheel by hand. The bearings are correctly adjusted if:

- The wheel spins freely and easily.
- The weight of the spoke reflector, when you put it toward the front or rear of the bicycle, causes the wheel to spin back and forth several times.
- There is no side-to-side movement at the wheel rim when you push it to the side with light force.

Lubrication

WARNING:

- Do not over lubricate. If oil gets on the wheel rims or the brake shoes, it will reduce brake performance and a longer distance to stop the bicycle will be necessary. Injury to the rider or to others can occur.
- The chain can throw excess oil onto the wheel rim. Wipe excess oil off the chain.
- Keep all oil off the surfaces of the pedals where your feet rest.
- Using soap and hot water, wash all oil off the wheel rims, the brake shoes, the pedals, and the tires.
- Rinse with clean water and dry completely before you ride.
- Using a light machine oil (20 W), lubricate the bicycle according to the following table:

Lubrication Table (as equipped)

What	When	How
Pedals	every six months	Put four drops of oil where the axles go into the pedals.
Chain	every six months	Put one drop of oil on each roller of the chain. Wipe all excess oil off the chain.
Derailleurs	every six months	Put one drop of oil on each pivot point of the derailleurs.
Brake Levers	every six months	Put one drop of oil on the pivot point of each brake lever.
Wheel Brakes	every six months	Put one drop of oil on the pivot point of each cantilever brake.
Brake and cable	every six months	Put four drops of oil into both ends of each cable. Allow oil to soak back along the cable wire.
Rear Sprocket Cluster	every six months	Lay the bicycle on its left side. Slowly turn the rear wheel clockwise. Put four drops of oil in the crack between the rear sprockets (which are stationary) and the freewheel body (which is turning clockwise).
Shock Fork	every six months	Lift up the rubber fork boot and dab a small amount of grease on the fork leg just above the plastic bushing.

Rules of the Road

WARNING: Failure of the rider to obey the following "Rules of the Road" can result in injury to the rider or to others.

- It is the responsibility of parents or carers to ensure child is properly instructed in the use of this bicycle, particularly in the safe use of the braking systems (especially the back-pedal/coaster brake).
- Obey all traffic regulations, signs, and signals.
- **Protective Equipment must be worn:** Always wear safety equipment such as a helmet that meets AS/NZS (or equivalent standard for your country) with chinstrap securely fastened, knee pads, elbow pads, wrist guards, gloves and shoes.
- Always wear shoes when using this product.
- Ride on the correct side of the road, in a single file, and in a straight line.
- **Bikes 30 cm (12 in) and under not intended for use on public roads.**
- Avoid riding at night, dusk, dawn and any other time of poor visibility.
- Ensure all spares, (tires, tubes, and brake pads, etc) are same as original equipment.

- **Reflectors:** For your own safety, do not ride the bicycle if the reflectors are incorrectly installed, damaged, or missing. Make sure the front and rear reflectors are vertical. Do not allow the visibility of the reflectors to be blocked by clothing or other articles. Dirty reflectors do not work well. Clean the reflectors, as necessary, with soap and a damp cloth.
- **Use extra caution in wet weather:**
  - Ride slowly on damp surfaces because the tires will slide more easily.
  - Allow increased braking distance in wet weather.
- **Avoid these hazards to prevent loss of control or damage to your wheels:**
  - Be aware of drain grates, soft road edges, gravel or sand, pot holes or ruts, wet leaves, or uneven paving.
  - Cross railroad tracks at a right angle to prevent the loss of control.
  - Avoid unsafe actions while riding.
  - Do not carry any passengers.
  - Do not carry any items or attach anything to your bicycle that could hinder your vision, hearing, or control.
  - Do not ride with both hands off the handlebar.
  - This bicycle is not suitable for the fitting of a luggage carrier and (or) a child seat.

Maximum rider/bike weight for this product is as follows:				
Bike Size	Rider		Rider + Bike	
	kg	lbs	kg	lbs
12	27	60	34.3	76
14	27	60	34.7	77
16	27	60	35.6	79
18	34	72	43.5	93

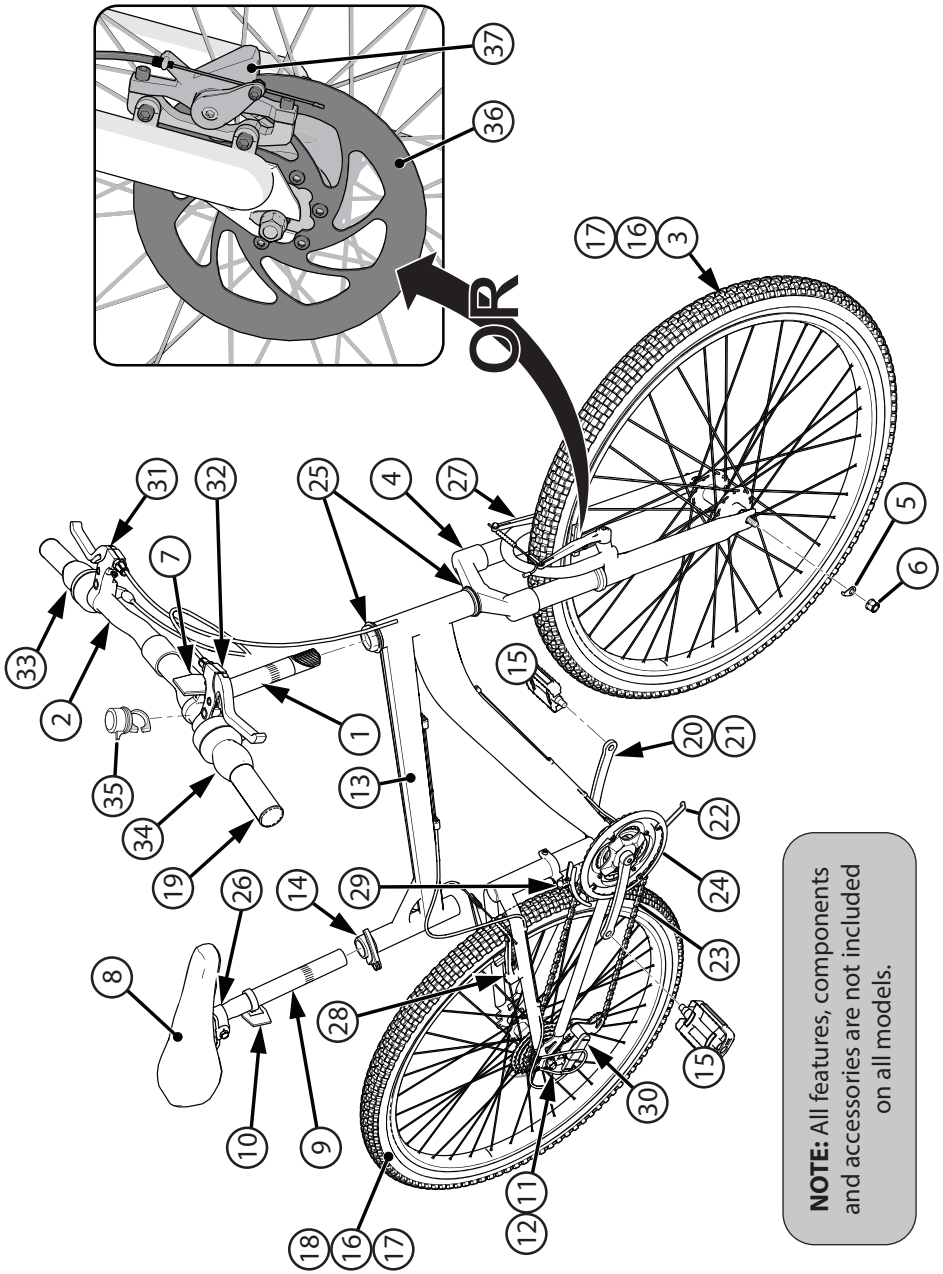

Tires

Maintenance:

- Frequently check the tire inflation pressure because all tires lose air slowly over time. For extended storage, keep the weight of the product off the tires.
- Do not use unregulated air hoses to inflate the tire/tubes. An unregulated hose can suddenly over inflate bicycle tires and cause them to burst.
- Replace worn tires.

⚠ **WARNING:** Do not ride or sit on the bicycle if a tire is under inflated. This can damage the tire, inner tube and rim.

Inflating the Tires:

- Use a hand or a foot pump to inflate the tires.
- Service station meter-regulated air hoses are also acceptable.
- The maximum inflation pressure is shown on the tire sidewall.
- If two inflation pressures are on the tire sidewall, use the higher pressure for on-road riding and the lower pressure for off-road riding.
- The lower pressure will provide better tire traction and a more comfortable ride.

Before adding air to any tire, make sure the edge of the tire (the bead) is the same distance from the rim, all around the rim, on both sides of the tire. If the tire does not appear to be seated correctly, release air from the inner tube until you can push the bead of the tire into the rim where necessary. Add air slowly and stop frequently to check the tire seating and the pressure, until you reach the correct inflation pressure.

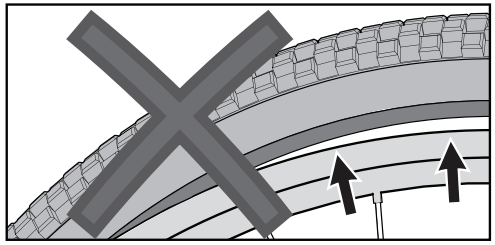

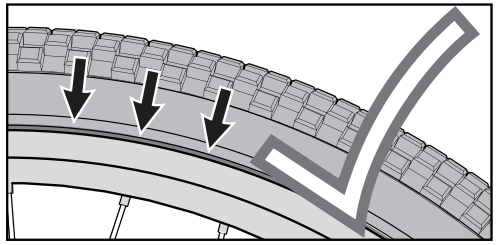

Recommended Tire Pressure (kilopascals):
Frequently check the tire inflation pressure because all tires lose air slowly over time. For extended storage, keep the weight of the product off the tires.

Recommended tire pressure is marked on the side of the tire.

(PSI to kPa Conversion)	
PSI	**kPa**
20	140
30	210
40	275
50	345
60	415

Maintenance and Service

⚠ WARNING:

- As with all mechanical components, the bicycle is subjected to wear and high stresses. Different materials and components might react to wear or stress fatigue in different ways. If the design life of a component has been exceeded, it may suddenly fail, possibly causing injuries to the rider. Any form of crack, scratches, or change of coloring in highly stressed areas indicate that the life of the component has been reached and should be replaced.
- Inspect the product frequently. Failure to inspect the product and to make repairs or adjustments, as necessary, can result in injury to the rider or to others. Make sure all parts are correctly assembled and adjusted as written in this manual and any "Special Instructions".
- Immediately replace any damaged, missing, or badly worn parts with original equipment.
- Avoid wearing loose clothing and items when riding or performing maintenance to reduce risk of entrapment that could result in an injury.
- Dirty or greasy wheel rims can render your brakes ineffective. To avoid injury, clean frequently, using a clean rag or wash with soapy water, rinse and air dry. Do not clean them with oily or greasy materials.
- High temperatures, intensive use, and impact damage may be invisible to the user and result in injury to rider. If you suspect damage or excess wear to wheel rims, frame, fork, suspension joints (if any), or composite components (if any), seek service from bike shop for repair.
- Make sure all fasteners are correctly tightened as written in this manual and any "Special Instructions". Parts that are not tight enough can be lost or operate poorly. Over tightened parts can be damaged. Make sure any replacement fasteners are the correct size and type.
- Self-locking nuts and other self-locking fasteners may lose their effectiveness when re-used.

NOTE: Have a bicycle service shop make any repairs or adjustments for which you do not have the correct tools or if the instructions in this manual or any "Special Instructions" are not sufficient for you.

No.	Description	No.	Description
1	Handlebar Stem	20	Crank & Spindle Set
2	Handlebar	21	Crank Bearings
3	Front Wheel Assembly	22	Kickstand (as equipped)
4	Fork	23	Chain
5	Wheel Retainer (x2) (as equipped)	24	Chain guard
6	Axle Nut (x4) (as equipped)	25	Head Set Bearing
7	Front Reflector (as equipped)	26	Seat Post Hardware
8	Seat	27	Front Linear Pull Brake (as equipped)
9	Seat Post	28	Rear Brake
10	Rear Reflector (as equipped)	29	Front Derailleur
11	Guard Screws (x2) (as equipped)	30	Rear Derailleur
12	Derailleur Guard (as equipped)	31	Brake Lever - Left (Front Wheel)
13	Frame	32	Brake Lever - Right (Rear Wheel)
14	Quick Release Lever	33	Shift Mechanism, Front
15	Pedal (Left & Right Set)	34	Shift Mechanism, Rear
16	Tire (x2)	35	Bell (if equipped)
17	Tube (x2)	36	Disc Brake (various models)
18	Rear Wheel Assembly	37	Disc Brake Caliper (various models)
19	Grips (x2)		

Introduction to Assembly

THIS OWNER'S MANUAL IS MADE FOR SEVERAL DIFFERENT BICYCLES:

- Some illustrations may vary slightly from the actual product.
- Follow instructions completely.
- If the bicycle has any parts that are not described in this manual, look for separate "Special Instructions" that are supplied with the bicycle.
- Models may have different accessory items such as bags, baskets, reflectors, cup holders, racks, etc.
- All features, components and accessories are not included on all models.
- Use the Index page to locate specific sections of this manual.
- Please read through this entire manual before beginning assembly or maintenance.
- If you are not confident with assembling this unit, refer to a local bike shop.

WARNING: Keep small parts away from children during assembly.

Do not dispose of the carton and packaging until you complete the assembly of the bicycle. This can prevent accidentally discarding parts of the bicycle.

NOTE: All of the directions (right, left, front, rear, etc.) in this manual are as seen by the rider while seated on the bicycle.

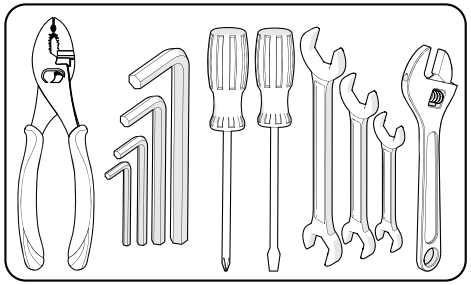

Tools Recommended
(Metric)

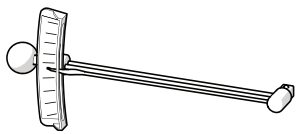

Torque Wrench (recommended)

Front Derailleur Adjustments - continued

Put the "high" adjusting screw (H) in the correct position as follows:

- Shift the chain onto the largest front sprocket and the smallest rear sprocket.
- Turn the "high" adjusting screw (H) so the right inside edge of the chain cage and the chain just do not touch.

NOTE: If the shift lever does not move easily:

- If the shift cable seems to stick, lubricate it.
- Do not lubricate the shift control.
- If the shift cable is sharply bent, rusted or has broken strands, replace it.

Perform the "Rear Derailleur Adjustments" if:

- The chain will not shift onto all the rear sprockets.
- The chain comes off the rear sprockets.
- The chain makes noise while on the smallest or largest rear sprocket.
- The rear derailleur rubs the spoke protector.

See Torque Chart for Recommended Fastener Torque

Front Derailleur Adjustments

These instructions describe most adjustments that the shift system may need. If you can not adjust the shift system using these instructions, have a bicycle service shop do the adjustments that are needed.

The Handlebar Twist Grips (or Thumb Shifts) (**View ❶**) control the Shift System. The Left Side Ⓐ shifts the chain on the front sprockets (**View ❷**). The Right Side Ⓑ shifts the chain on the Rear Sprocket (**View ❸**).

The front derailleur (**View ❷**) has two adjusting screws. The "low" adjusting screw, sometimes marked **Ⓛ**, limits how far the front derailleur and chain can move toward the frame. The "high" adjusting screw, sometimes marked **Ⓗ**, limits how far the front derailleur and chain can move away from the frame.

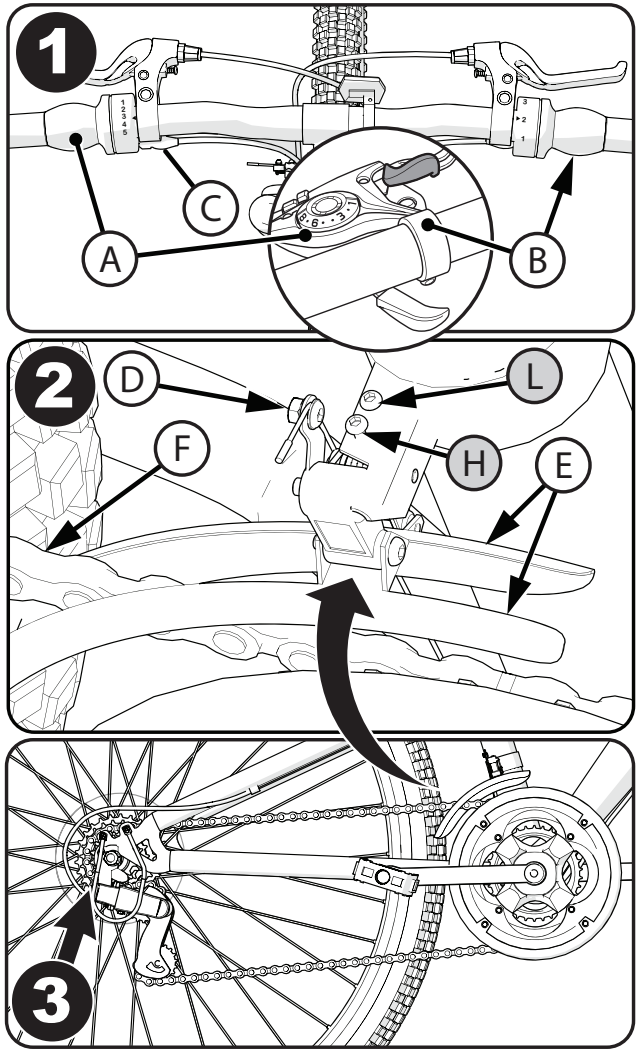

Put the "low" adjusting screw Ⓛ in the correct position as follows:

- Shift the chain onto the third largest rear sprocket and the smallest front sprocket.
- Turn the lever Barrel Adjuster Ⓒ all the way IN.
- Loosen Nut Ⓓ of the cable clamp.
- Turn the "low" adjusting screw **Ⓛ** so the left inside edge of the chain cage Ⓔ and the chain Ⓕ just do not touch.
- Remove the slack from the cable wire and tighten Nut Ⓓ securely.

Handlebar and Stem Installation (various models)

⚠ WARNINGS:

- To prevent steering system damage and possible loss of control, the "MIN-IN" (minimum insertion) mark Ⓐ on the stem must be below the top of the Fork Locknut Ⓑ.
- The Front Brake (if equipped) must be positioned in FRONT of the Fork.
- Ensure the Fork is pointing FORWARD before proceeding.
- Do not over tighten the stem bolt. Over tightening the stem bolt can damage the steering system and cause loss of control.
- If the handlebar clamp in not tight enough, the handlebar can slip in the stem. This can cause damage to the handlebar or stem, and can cause loss of control.

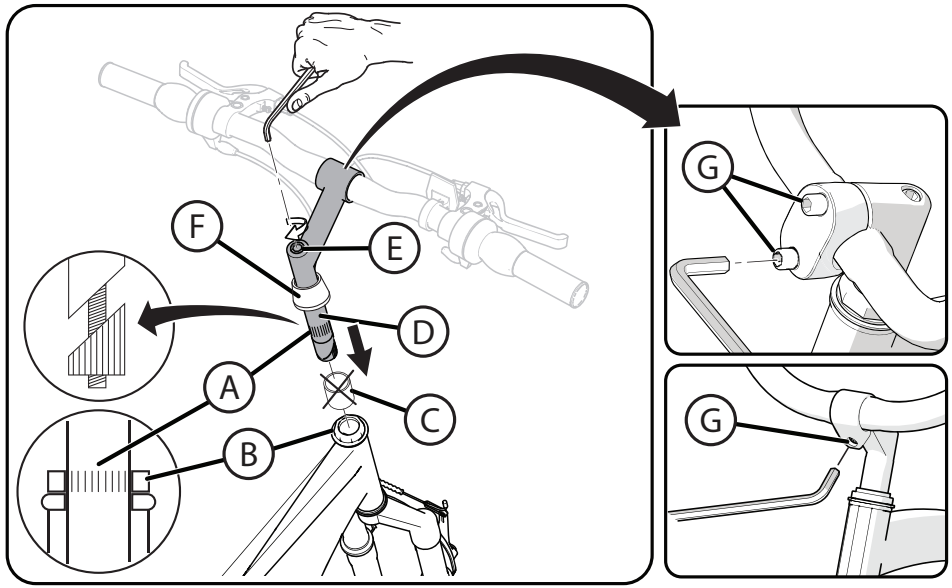

BEFORE STARTING:

- Remove plastic Cap Ⓒ from the end of the Stem Ⓓ. Loosen Stem Bolt Ⓔ as needed.
- Push Reflector UP on Stem (if equipped) - Rotate Handlebar Reflector Forward - tighten as needed.
- Push Collar Ⓕ UP on Stem (if equipped).

1. Insert the Stem into the Fork Locknut Ⓑ up to the top of the MIN-IN mark Ⓐ.
2. Tighten the Stem Bolt Ⓔ just enough to hold it in position.
3. If necessary, loosen the Handlebar Clamp Nut Ⓖ and rotate Handlebar into a comfortable riding position.
4. Tighten Handlebar Clamp Nut Ⓖ just enough to hold it in position.
5. Align the Stem with the front tire/fork and tighten the Stem Bolt Ⓔ securely (see Testing Stem, next section). **Torque** 17-19NM
6. If necessary, re-adjust Handlebar and tighten Clamp Nut Ⓖ securely.
7. Once fully aligned, tighten all hardware securely.

Handlebar Installation - various Stem Clamps

❶ ONE BOLT STEM:

1. If necessary, loosen the Handlebar Clamp Bolt(s) Ⓐ and rotate Handlebar Ⓑ into a comfortable riding position.
2. Tighten Handlebar Clamp Bolts(s) Ⓐ securely.

❷ TWO BOLT STEM:

1. If necessary, loosen the Handlebar Clamp Bolt(s) Ⓐ and rotate Handlebar Ⓑ into a comfortable riding position.
2. Tighten Handlebar Clamp Bolts(s) Ⓐ securely.

❸ FOUR BOLT STEM:

1. If necessary, loosen the Handlebar Clamp Bolt(s) Ⓐ and rotate Handlebar Ⓑ into a comfortable riding position.
2. Tighten Handlebar Clamp Bolts(s) Ⓐ securely.

NOTE: On four bolt stems, tighten Bolts Ⓐ evenly in a cross-pattern as shown. Do not over tighten.

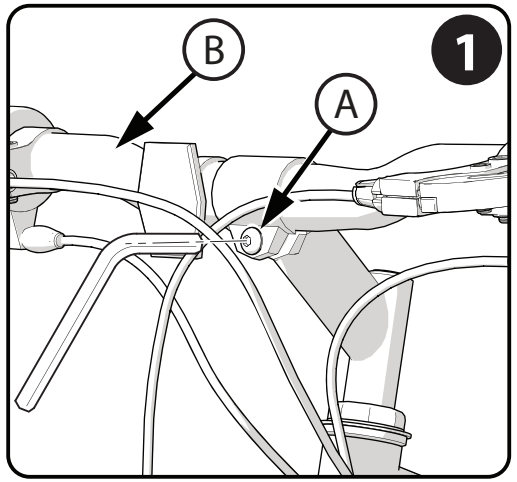

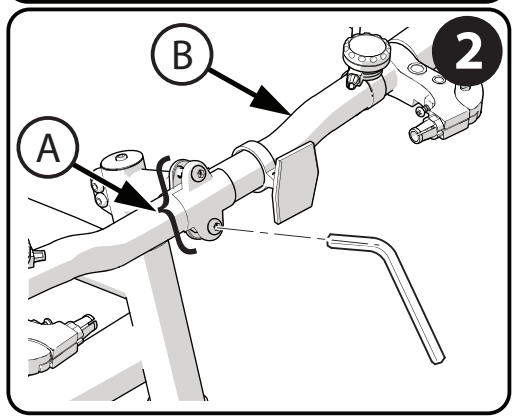

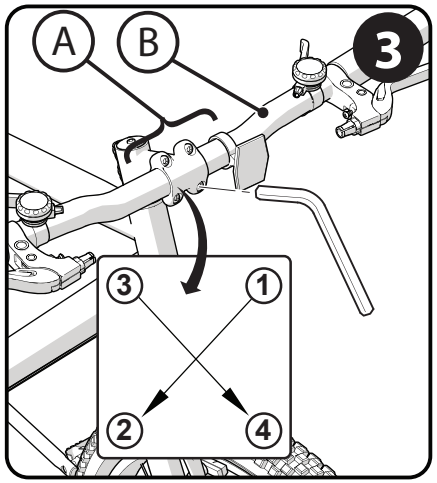

⚠ **WARNING:** If the handlebar clamp in not tight enough, the handlebar can slip in the stem. This can cause damage to the handlebar or stem, and can cause loss of control.

See Torque Chart for Recommended Fastener Torque

Rear Derailleur Adjustments - continued

Put the "low" adjusting Screw in the correct position as follows:

- Shift the chain onto the largest rear Sprocket Ⓕ.
- Loosen Nut of the cable clamp.
- Turn the "low" adjusting Screw Ⓛ so the Jockey Roller is exactly below the largest rear sprocket. (**fig 06**)
- Tighten the Nut of the cable clamp.

Adjust the Index Shift System:

- Shift the chain onto the smallest rear sprocket.
- Without turning the crank, turn the Right Shift Control Ⓐ one "click" rearward - or "click" thumb lever (**fig 07**).
- Slowly turn the crank forward.
- The chain should move from the smallest rear sprocket to the next larger rear sprocket.
- Turn the Adjusting Barrel Ⓑ OUT as needed so the chain moves exactly on to the second rear sprocket and does not rub, jump, or delay.

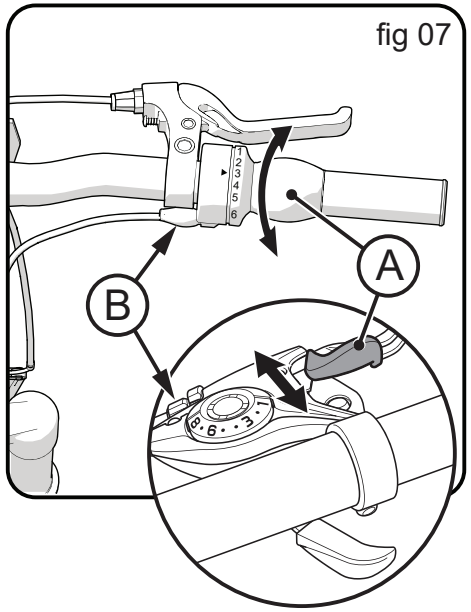

When adjusted properly, the shift system will operate smoothly with no chain rubbing.

NOTE: If you have trouble, take the bike to a bike shop.

Rear Derailleur Adjustments

The rear derailleur has two adjusting screws. The "low" adjusting screw, sometimes marked Ⓛ, limits how far the rear derailleur and chain can move toward the wheel. The "high" adjusting screw, sometimes marked Ⓗ, limits how far the rear derailleur and chain can move away from the wheel.

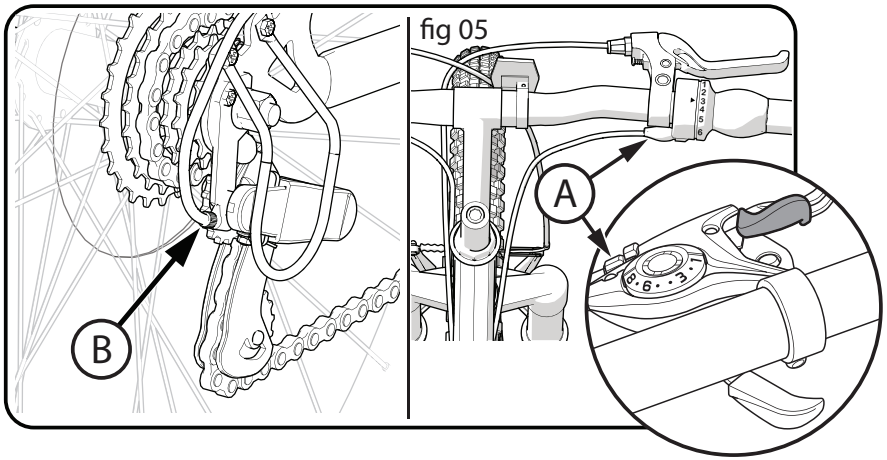

fig 05

Put the "high" adjusting screw in the correct position as follows:

- Shift the chain onto the smallest rear sprocket. Loosen Nut Ⓒ of the cable clamp.
- Turn the lever Barrel Adjuster Ⓐ and rear Derailleur Adjustor Ⓑ all the way IN (**fig 05**).
- Turn the "high" adjusting Screw Ⓗ so the Jockey Roller Ⓓ is in line with the outside edge of the smallest rear Sprocket Ⓔ (**fig 06**)
- Remove the slack from the cable wire and tighten the Nut of the cable clamp.

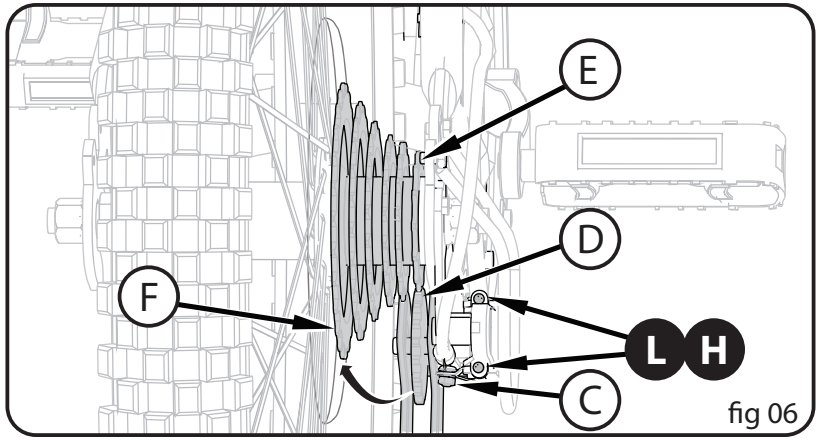

fig 06

continued >>

Installing the Front Wheel (as equipped)

Loosen the Front Brakes:

1. Squeeze the two Brake arms together Ⓐ.
2. Lift out the Brake Cable Guide Ⓑ from the Guide Bracket Ⓒ.

Install the Front Wheel:

3. Set the Front Wheel into the front fork with Brakes pointing forward.
4. Install wheel retainers Ⓓ making sure the tabs are in the Fork Retainer Holes Ⓔ.
5. Attach the front wheel with the Axle Nuts Ⓕ.

NOTE: For Quick Release Axle, see next section.

WARNING: Do not use Nuts Ⓕ without serrations to attach the front wheel.

NOTE: Ensure wheel spins freely without contacting fork or fender.

WARNING: Failure to obey these steps can allow the front wheel to loosen while riding. This can cause injury to the rider or to others.

RE-ATTACH FRONT BRAKE CABLE:

1. Squeeze the two Brake arms together Ⓐ.
2. Insert the Brake Cable Guide Ⓑ into the cutout in the Guide Bracket Ⓒ.
3. Make sure the Brake Cable Guide Ⓑ is seated securely in the Guide Bracket Ⓒ cutout.

WARNING:

Check Front Brake Adjustment Before Riding! See Brakes Section

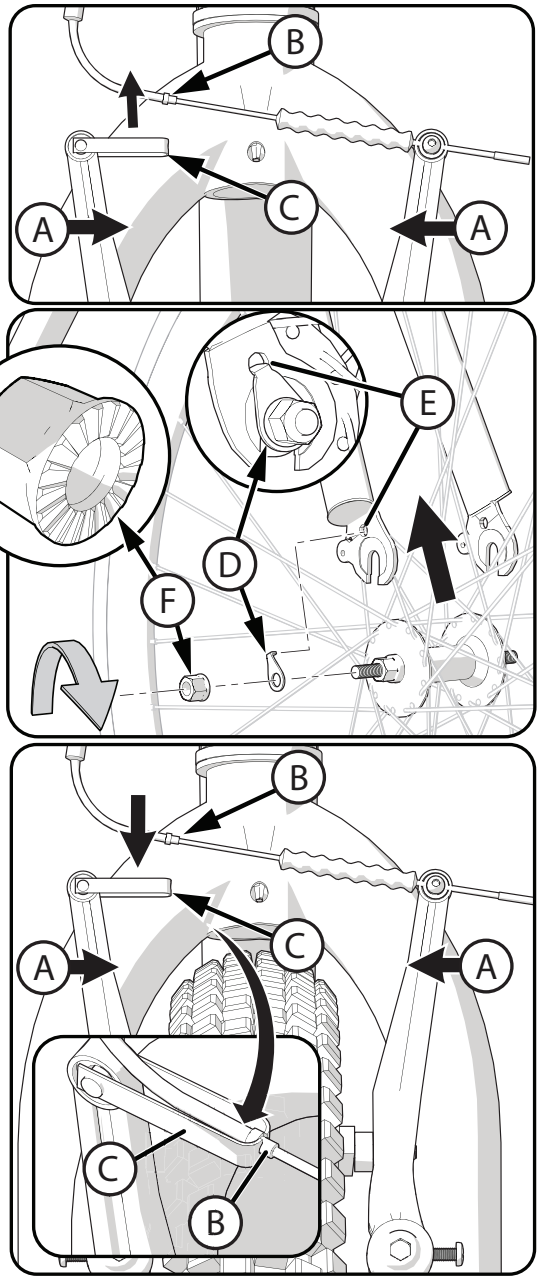

Testing Stem and Handlebar Tightness

TO TEST THE TIGHTNESS OF THE STEM:

- Straddle the front wheel between your legs.
- Try to turn the front wheel by turning the handlebar ❶.
- If the handlebar and stem turn without turning the front wheel, realign the stem with the wheel and tighten the stem bolt(s) tighter than before (about 1/2 revolution only at a time) until the handlebar and stem do not turn without turning the front wheel.

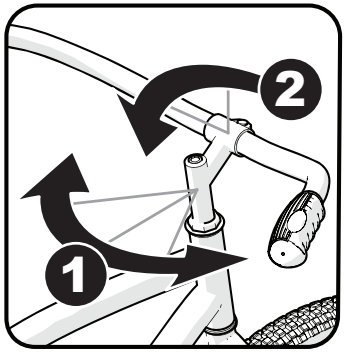

TO TEST THE TIGHTNESS OF THE HANDLEBAR CLAMP:

- Hold the bicycle stationary and try to move the ends of the handlebar up and down ❷.

CAUTION: Do not exceed 100 lbs (45 kg) downward force.

- If the handlebar moves, loosen the bolt(s) of the handlebar clamp.
- Put the handlebar in the correct position and tighten the bolt(s) of the handlebar clamp tighter than before.
- If the handlebar clamp has more than one bolt, tighten the bolts equally.
- Do this test again, until the handlebar does not move in the handlebar clamp.

See Torque Chart for Recommended Fastener Torque

Shift System - continued

THESE ARE THE HIGHER GEAR COMBINATIONS:

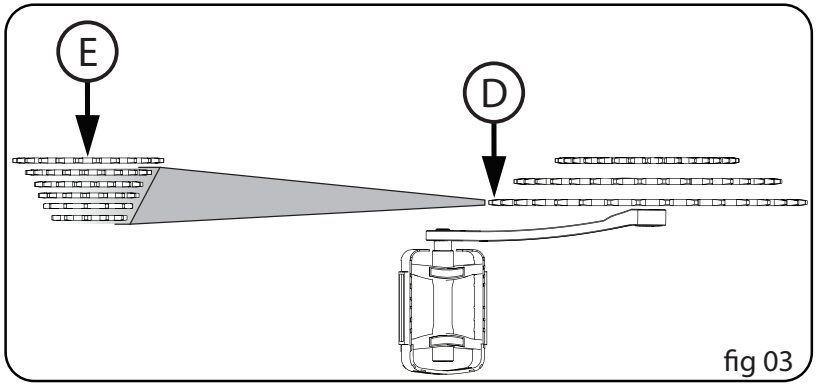

fig 03

- They allow you to pedal harder and at a slower rhythm, but with more distance traveled per pedal revolution.
- For the best performance in this case, do not use the largest rear sprocket Ⓔ.

THESE ARE THE MIDDLE RANGE GEAR COMBINATIONS:

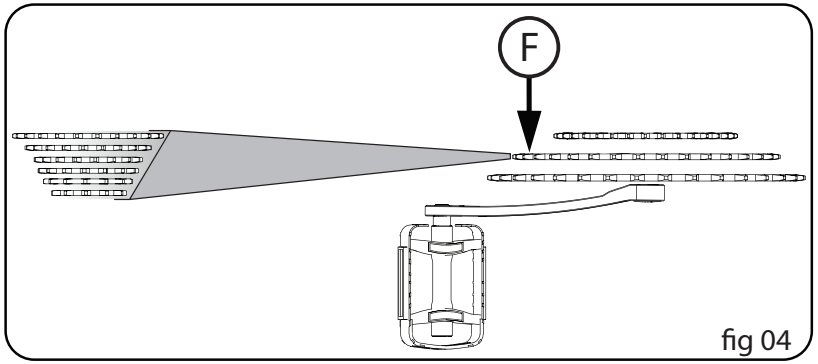

fig 04

- These overlap some of the higher and some of the lower gear combinations.
- On bicycles with three front sprockets, you may wish to keep the chain on the middle front sprocket Ⓕ and shift the chain on the rear sprocket cluster.

Shift System - continued

CAUTION: Do not force the shift levers. Shift only when pedaling forward and without strong force. Do not backpedal. Backpedaling can cause the chain to come off the sprockets. Backpedaling and shifting while not pedaling can damage the sprockets and stretch the cable wire.

There is no "correct gear" in which to ride the bicycle. The "correct gear" is the one that is comfortable to you.

To select a gear or sprocket combination while riding:

1. While pedaling, shift the chain onto different front and rear sprocket combinations.
2. You will feel a difference in the rhythm and ease of pedaling.
3. Shift the chain to the gear that allows you to pedal at a rhythm and effort that is comfortable to you.
4. When riding uphill or against the wind, you may wish to keep the chain on the smallest front sprocket Ⓐ and shift the chain on the rear sprocket cluster Ⓑ.

THESE ARE THE LOWER GEAR COMBINATIONS:

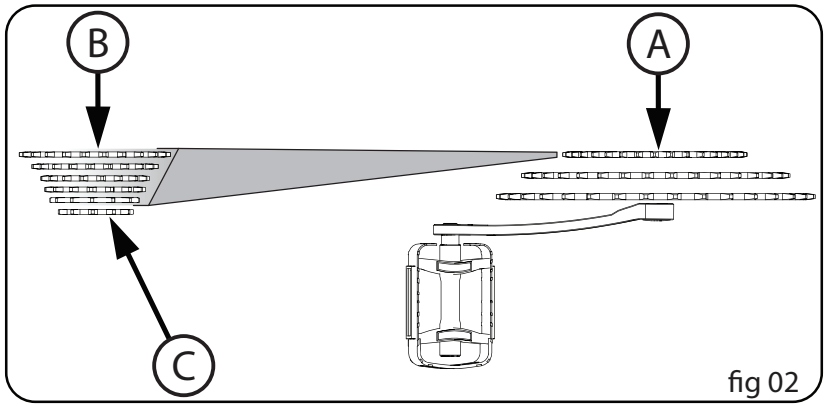

fig 02

- They allow you to pedal easier and at a faster rhythm, but with less distance traveled per pedal revolution.
- For the best performance in this case, do not use the smallest rear sprocket Ⓒ.
- When riding downhill or with the wind, you may wish to keep the chain on the largest front sprocket Ⓓ and shift the chain on the rear sprocket cluster.

continued >>

Seat Installation

WARNING: To prevent the Seat Ⓐ coming loose and possible loss of control, the "MIN-IN" (minimum insertion) mark Ⓑ on the Seat Post must be below the top of the Seat Tube Ⓒ.

SEAT AND SEAT POST SETUP:

1. If needed, loosen Nuts on Seat Clamp Ⓓ and rotate Seat into riding position.
2. Ensure the Seat Post Ⓔ is fully through the TOP Seat Clamp Ⓓ.
3. Tighten the Seat Clamp so the Seat does not move on the seat post.
4. If the Seat Clamp has a Nut on each side, tighten both nuts equally.
5. Point the Seat forward and put the Seat Post Ⓔ into the Seat Tube Ⓒ and proceed to next step.

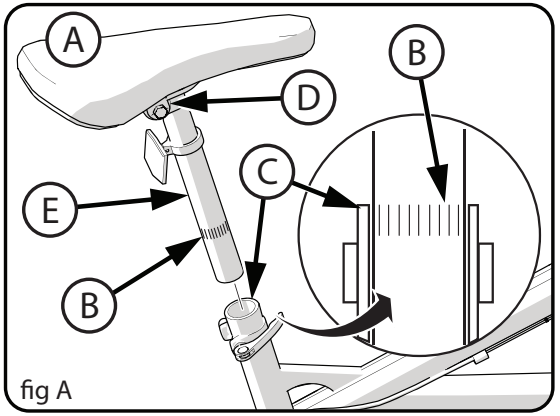

fig A

TIGHTEN THE QUICK RELEASE LEVER:

NOTE: The words "open" and "close" are on opposite sides of the quick release lever.

CAUTION: Operate the Quick Release Lever Ⓕ by hand only. Do not use a hammer or any other tool to tighten the quick release lever.

1. Move the Quick Release Lever Ⓕ to the "open" position so the word "open" is pointing away from the Seat Post Clamp Ⓖ.

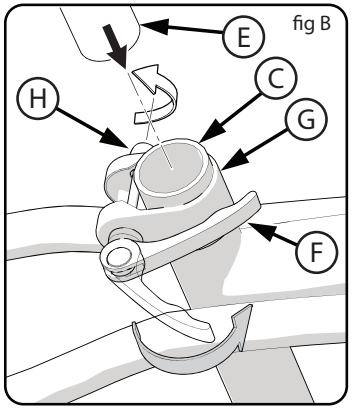

fig B

WARNING: You must use strong force to move the quick release lever to the "close" position. If you can easily move the lever to the "close" position, the clamping force is too light. If the clamping force of the Quick Release Lever is too light, the seat post can loosen while riding. This can cause injury to the rider or to others.

2. Open and close the Quick Release Lever with one hand while you turn the Adjusting Nut Ⓗ with the other hand.
3. Tighten or loosen the adjusting nut by hand, so that you first feel resistance to the quick release lever when it perpendicular to the bicycle frame.
4. Push the Quick Release Lever to the "close" position.
5. When in the "close" position, make sure the Quick Release Lever lays against the Seat Post Clamp Ⓖ.
6. The tightening torque of the Quick Release Lever should be tight enough so that the seat does not move during normal operation.

See Torque Chart for Recommended Fastener Torque

Testing Seat Clamp and Post Clamp Tightness

To test the tightness of the Seat Clamp and the Post Clamp:

WARNING: Every time the quick release mechanism is loosened, make sure the red reflector is correctly positioned.

Try to turn the seat side to side and to move the front of the seat up and down.

If the seat moves in the Seat Clamp:

- Loosen the Seat Clamp.
- Put the seat in the correct position and tighten the Seat Clamp tighter than before.
- Do this test again, until the seat does not move in the Seat Clamp.

If the Seat Post moves in the Seat Tube:

- Move the Quick Release Lever to the "open" position.
- Put the seat in the correct position and tighten the Quick Release Lever tighter than before.
- If necessary, loosen Quick Release Lever, tighten Adjusting Nut and re-tighten Quick Release Lever.
- Do this test again, until the seat post does not move in the seat tube.

Shift System

PARTS OF THE SHIFT SYSTEM:

- Left-hand Shifter Ⓐ operates the Front Derailleur Ⓑ
- Right-hand Shift Lever Ⓒ operates the Rear Derailleur Ⓓ
- Front Sprocket Set Ⓔ
- Rear Sprocket Set Ⓕ

NOTE: Some models are not equipped with Front Derailleur Ⓑ and Front Shift Lever Ⓐ

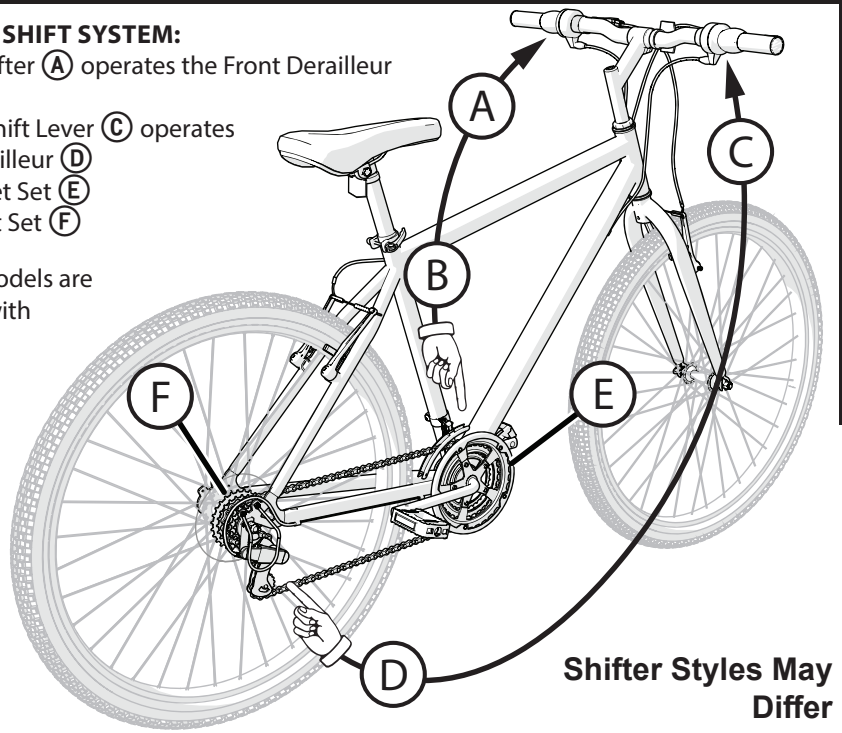

WARNING:

- Never shift a derailleur onto the largest or the smallest sprocket if the derailleur is not shifting smoothly. The derailleur may be out of adjustment and the chain could jam, causing loss of control and injury.
- Never move the shifter while pedaling backward, nor pedal backwards immediately after having moved the shifter. This could jam the chain and cause damage to the bicycle and/or loss of control and injury.

OPERATE THE SHIFT SYSTEM AS FOLLOWS:

1. The rider turns the Rear Shift Control Ⓒ around the handlebar (for twist shift models) or moves the shift lever (thumb shift models) to an index position
2. When the rear shift control moves into each position with a "click" sound, the shift is complete
3. The rider turns the Front Shift Control Ⓐ around the handlebar (for twist shift models) or moves the shift lever to an index position (thumb shift models)
4. Each shift control pulls a cable wire that is attached to the derailleur.
5. The derailleur moves and guides the chain from one sprocket to another.
6. If there is some chain noise after the shift, turn the rear shift control a small amount to "trim" the rear derailleur.

Disc Brake System - continued

Adjusting Barrel Ⓒ on the Caliper. Turn the Adjusting Barrel OUT to tighten the brakes or IN to loosen the brakes.

NOTE: Make sure the Adjusting Barrel threads are fully engaged. Check adjustment again.

8. If you cannot reduce the gap by turning the Adjusting Barrel, the brake pads might be worn out and need to be replaced.

PAD REPLACEMENT:

1. Remove the Caliper Mounting Bolts Ⓕ.
2. Remove the Caliper assembly Ⓔ.
3. Remove the Brake Pads from the Caliper.
4. Install the new Pads using same type and size.
5. Install the Caliper assembly Ⓔ to the mounts on the fork (front), or frame (rear) (front shown).
6. Tighten the caliper Mounting Bolts Ⓕ securely.
7. Route the Cable Ⓓ through the lower Adjusting Barrel Ⓒ and Cable Clamp Ⓐ.
   - Ensure Cable Housing Ⓖ is fully inside Adjusting Barrel Ⓒ.
8. Pull the Cable through the Cable Clamp, and tighten the Clamp Ⓐ Bolt.

NOTE: Brake adjustment involves loosening the Cable Clamp Bolt. During installation, it only needs to be tightened enough to make sure the Cable End doesn't pull back through the Camp.

9. Adjust the Brake (as described above).

BRAKE SYSTEM MAINTENANCE:

- Check brake operation and adjustment before each ride.
- Keep the brake system free of dirt, mud, oil, and other foreign substances that will inhibit proper operation.
- Frequently check:
  - All components for damage.
  - The pads - for wear.
  - The lever - for smooth operation.
  - The cable - ensure there are no frayed ends, cuts, or kinks that inhibit operation. Add cable lube if the cable is dry.
  - All bolts and fasteners - ensure the bolts are tightened, replace any that are damaged.

NOTE: These are general instructions. Please refer to component manufacturer's documentation for product specific instructions.

Pedal Installation

CAUTION: There is a RIGHT pedal marked Ⓡ and a LEFT pedal marked Ⓛ.

NOTE: A Pedal Wrench is preferred for attaching Pedals. A thin open-end wrench can also be used.

- The pedal marked Ⓡ has right-hand threads. Tighten it in a **clockwise direction**.
- The pedal marked Ⓛ has left-hand threads. Tighten it in a **counterclockwise direction (anti-clockwise)**.
- Turn the right pedal marked Ⓡ into the right side of the crank arm, and the left pedal marked Ⓛ into the left side of the crank arm.

Tighten the pedals:

- Make sure the threads of each pedal are fully into the crank arm.

WARNING: Ensure pedals are secure in crank arms so they will not loosen. Periodically check tightness.

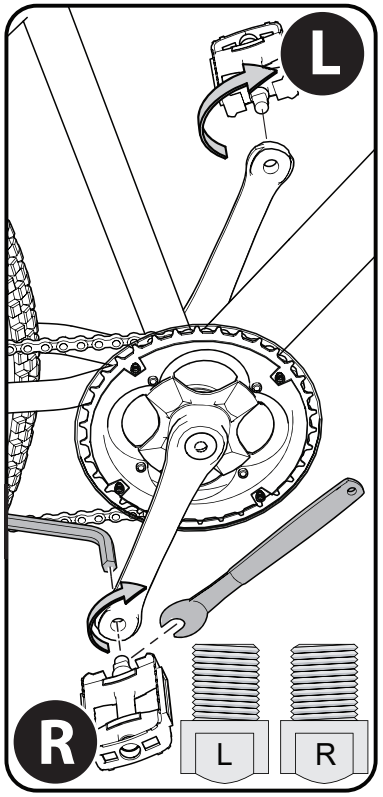

Accessories (if not installed)

Handlebar Bell:

- Remove Screw from Bell.
- Position Bell on handlebar within easy reach, with hands on the handlebar grips.
- Install Screw and tighten.

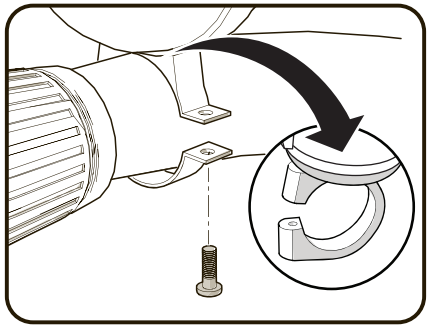

WARNING:

- CHOKING HAZARD. Small parts. Not for children under 3 years.
- Adult assembly is required.

Reflector Installation (as equipped)

Reflector Installation:

1. Position FRONT Reflector Ⓐ so it points straight forward.
2. Tighten Clamp Screw.
3. Position Seat Post Reflector (if equipped) Ⓑ so it points straight backwards.
4. Tighten Clamp Screw.

NOTE: Do not over-tighten. This will damage the Clamp.

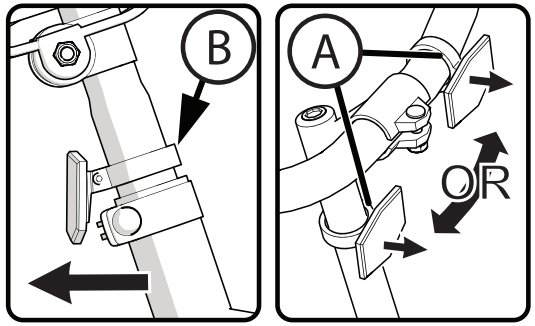

Dual Rear Reflectors (various models):

The Rear Reflectors Ⓐ may be pre-installed on the bike chain stays. Make sure they are secure, not bent and are pointing straight backwards.

NOTE: Reflectors Ⓐ either attach with Screws Ⓑ or are SNAP on (see images).

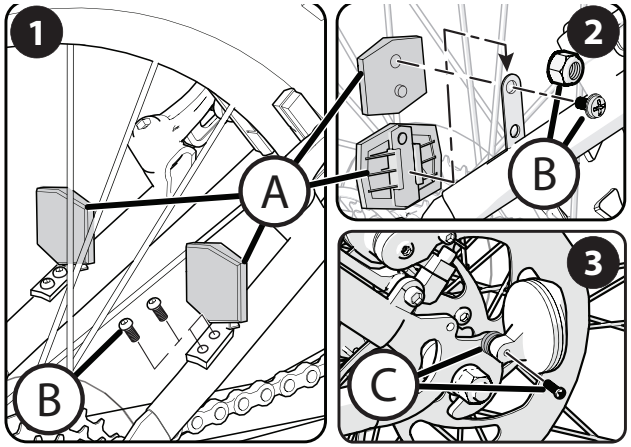

❶ **BRACKET MOUNT:** Attach Bracket to Chain Stay securely using Screws Ⓑ.
❷ **SCREW MOUNT:** Attach Reflector to Bracket securely using Nuts/Screws Ⓑ.
❷ **SNAP MOUNT:** Slide Reflector DOWN onto Bracket until it SNAPS into place.
❸ **FRAME MOUNT:** Position both Reflectors on Frame mount holes so they face straight **backwards** and attach securely with supplied Washers Screws Ⓒ as shown - 2 Washers between Reflector and Frame.

INSTALLING DERAILLEUR GUARD (ON SOME MODELS)

1. Loosen Screws Ⓐ in Frame Tabs.
2. Hook Guard Ⓑ over two Screws Ⓐ.
3. Make sure the Guard does not contact the Derailleur Ⓒ when shifting gears.
4. Tighten Screws Ⓐ securely.

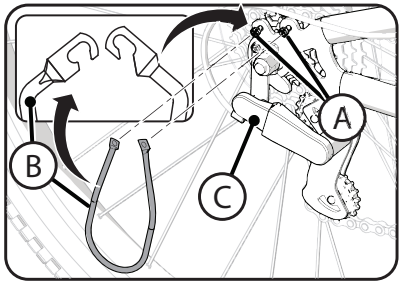

Disc Brake System Adjustment: (various models)

NOTE: For Hydraulic Brakes, see Manufacturer's instructions included with this product.

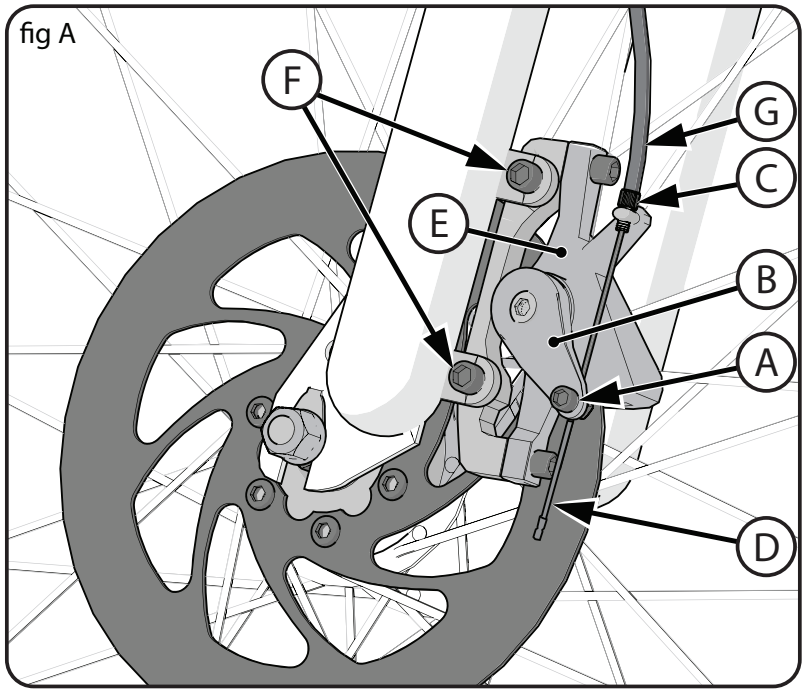

BRAKE ADJUSTMENT (see fig-A):

1. Loosen the Cable Clamp Bolt Ⓐ.
2. Push the Brake Arm Ⓑ toward the Adjusting Barrel Ⓒ (this applies the brake).
3. While holding the Brake Arm, pull the slack out of the Cable End Ⓓ (through the Cable Clamp) and tighten the Cable Clamp Bolt Ⓐ.

⚠ **WARNING:** Do not over tighten the Cable Clamp. Over tightening the Cable Clamp may cut the Cable and cause injury to the rider or to others.

4. Pull and release the brake lever several times to set the Brake Cable.
5. Spin the wheel. It should spin freely. If the Disc cannot spin freely in the Caliper, the Cable might be too tight. Loosen the Cable Clamp Bolt and allow the brake arm to move away from the adjusting barrel – repeat steps 1 through 4 until the wheel spins freely.

NOTE: An initial gap of 0.3mm (0.01 inch) is recommended.

6. A properly adjusted Caliper is set such that, the pads contact the Disc at approximately 1/3 lever travel and stops the disc at approximately 2/3 lever travel.
7. Minor adjustment can be made by turning the Adjusting Barrel on the brake lever or the

continued >>

Linear Pull Brake System - continued

Test the tightness of the cable clamp (fig C):

1. Squeeze each Brake Levers Ⓖ with firm pressure.
2. Make sure the cable does not move in the Cable Clamp Ⓔ.
3. If the cable moves in the cable clamp, adjust the brakes again but tighten the cable clamp tighter than before.
4. Do this test again, until the cable does not move in the cable clamp.

Test the travel of each brake lever:

1. Squeeze each Brake Lever Ⓖ with strong pressure.
2. If the brake lever touches the grip, adjust the brakes again.

WARNING: After you adjust the brakes again, if either brake lever touches the grip or does not work well, have a bicycle service shop repair or adjust the brakes.

Linear Pull Brake Pad Replacement

1. If necessary, loosen brake cable Adjustment Bolt Ⓐ.
2. Loosen and remove brake pad Bolt/Screws Ⓑ.
3. Remove old Brake Shoe Ⓒ.
4. Install new Brake Shoe, making sure it is pointing forward and lined up evenly with the Wheel Rim Ⓓ.
5. Tighten brake pad Bolt/ Screw and Adjustment Bolt according to Torque Chart.

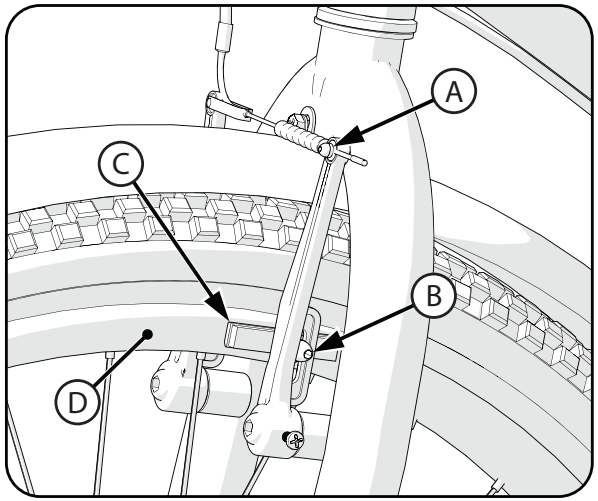

WARNING: Replace Brake Pad with same model and type as original.

Linear Pull Brake System Adjustment - Before Starting

IF EQUIPPED: The Following Sections Describe Final Brake System Adjustments Required Before Riding.

- Inflate Tires to recommended pressure on Tire side wall.
- Make sure Tire is centered in Fork.
- **If Needed, Re-attach Front Brake Cable:**
  - Squeeze the two Brake arms together Ⓐ.
  - Insert the Brake Cable Guide Ⓑ into the cutout in the Guide Bracket Ⓒ.
  - Make sure the Brake Cable Guide Ⓑ is seated securely in the Guide Bracket Ⓒ cutout.

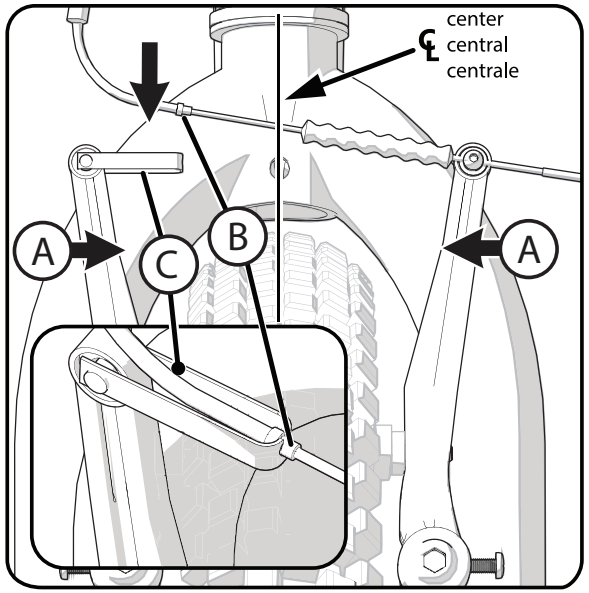

Check tightness of the cantilever mounting Bolt Ⓐ (fig A):

- Make sure each cantilever mounting Bolt is tightened securely.

Center brake shoes on rim:

1. Turn the Adjustment Screw Ⓑ on the cantilever arm to move the arm in or out so each Brake Shoe Ⓒ is the same distance from the rim.
2. Squeeze the brake lever two times.
3. Do this step again, until both brake shoes are the same distance from the rim.

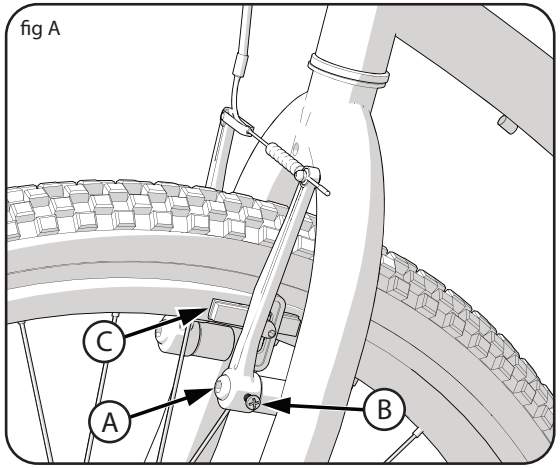

Linear Pull Brake System - Adjustment

NOTE: The front and rear break adjustments are the same.

WARNING: You must adjust the front and rear brakes before you ride the bicycle.

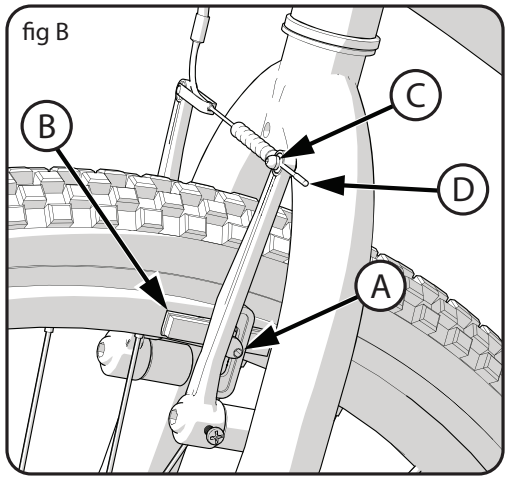

fig B

Step 1: Put the brake shoes Ⓑ in the correct position (fig B):

1. Loosen the Screw Ⓐ of each Brake Shoe Ⓑ.
2. Adjust each Brake Shoe so it is flat against the rim and aligned with the curve of the rim.
3. Make sure each Brake Shoe does not rub the tire.
4. If the surface of the Brake Shoe has arrows, make sure the arrows point toward the rear of the bicycle.
5. Hold each Brake Shoe in position and tighten the Screw.

Step 2: Test the tightness of each Brake Shoe:

1. Try to move each Brake Shoe out of position.
2. If a Brake Shoe moves, do Step 1 again, but tighten the nut tighter than before.
3. Do this test again, until each Brake Shoe does not move.

Step 3: Stretching the cable (fig B):

1. Hold both Brake Shoes against the rim.
2. Loosen the cable clamp Screw Ⓒ.
3. Pull the Cable Ⓓ tight and tighten the Screw.

WARNING: Do not over tighten the cable clamp Screw. Over tightening the cable clamp Screw may cut the cable and cause injury to the rider or to others.

4. Squeeze each brake lever firmly 20 times.
5. Hold both Brake Shoes against the rim and loosen the cable clamp Screw.
6. Pull the Cable Ⓓ tight and tighten the cable clamp Screw.

continued >>

Linear Pull Brake System Adjustment - continued

PUT THE BRAKE SHOES THE CORRECT DISTANCE FROM THE RIM:

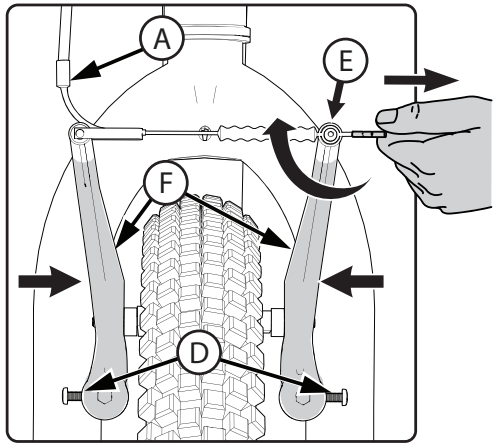

1. If desired, adjust Brake Levers Ⓖ to a comfortable distance from the grip using the Adjustment Screw Ⓗ. Turning the screw IN brings it closer to the grip.
2. Make sure brake line Sheaths Ⓐ, Ⓑ are seated correctly.
3. Position each Brake Shoe 1/16 inch away from the rim:
4. Turn the caliper brake adjusting Screws Ⓓ in or out to make the adjustment.
5. If the Brake Shoes Ⓒ cannot be positioned the correct distance from the rim, hold both Brake Shoes against the rim and loosen the cable clamp Screw Ⓔ
6. Squeeze the Brake Arms Ⓕ together and pull or loosen the cable wire slightly.
7. Tighten the cable clamp Screw.

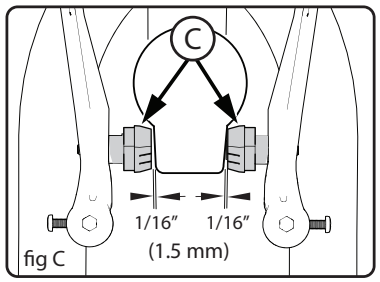

fig C

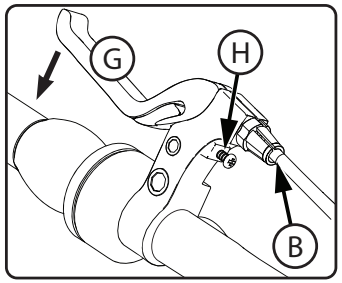

WARNING: Do not over tighten the cable clamp. Over tightening the cable clamp may cut the cable and cause injury to the rider or to others.

8. Repeat these steps until the brake shoes are 1/16 inch from the rim and the Brake Lever Ⓖ does not go all the way to the grip when squeezed (**fig C**).

WARNING: Do not move the brake shoes away from a wheel rim that is not true (straight). This can cause the caliper brake to be less effective and unsafe. To allow safe adjustment of the caliper brake, have a bicycle service shop true the wheel.

continued >>